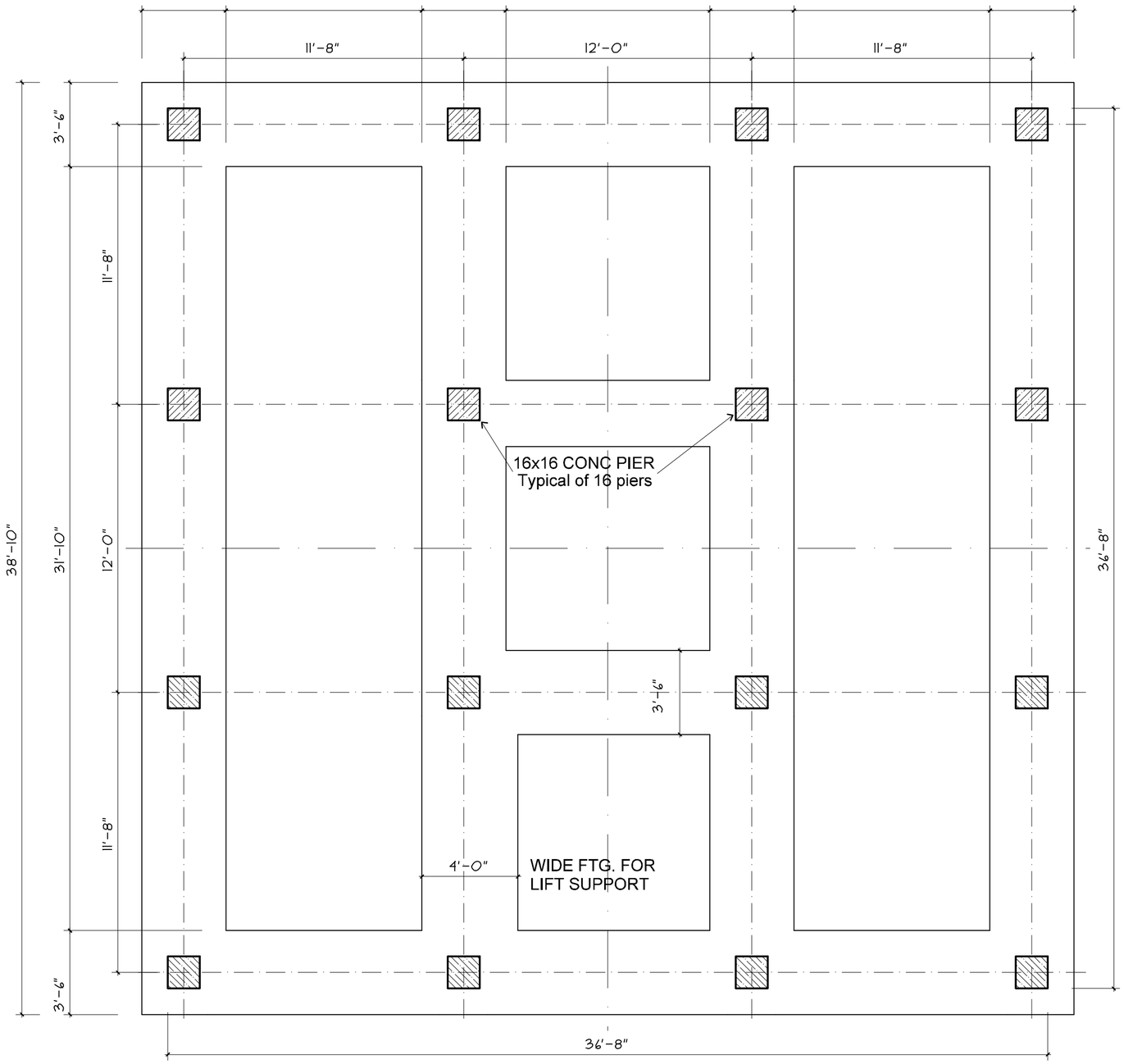

PIER PLAN

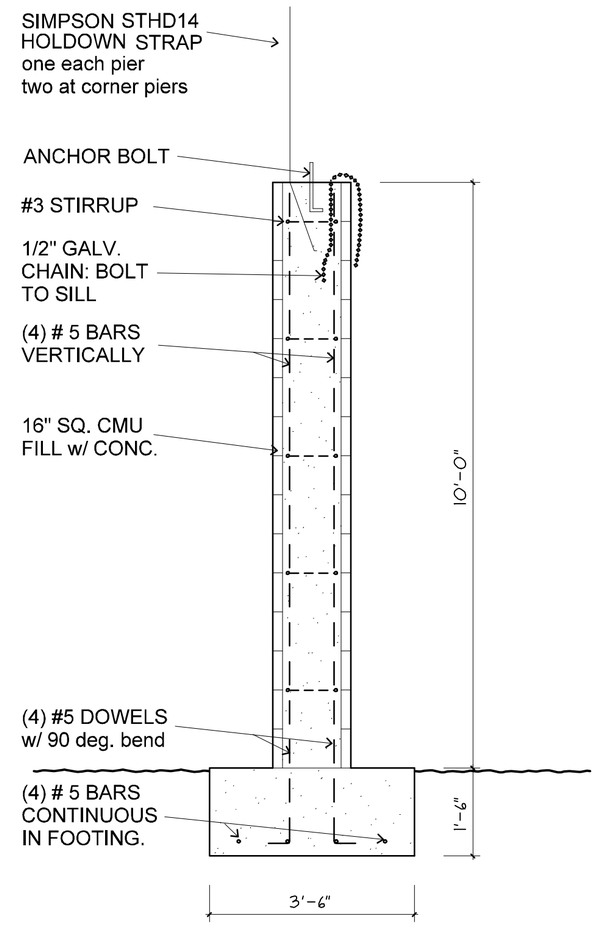

CONCRETE DETAIL

1/2" = 1'-0"

DECEMBER 21, 2006

MICHAEL
BEATTIE
ARCHITECT, PC

Post Office Box 1010
Middletown Springs
Vermont 05757 USA
802 235 2468 tel/fax
mbeattie@vermontel.net

CONCRETE
PLAN

SCALE 1/4" = 1'-0"

0 1 2 4 8

Arthur and Ceal
CONWAY HOUSE

CLARK AVE.
PASS CHRISTIAN, MS

NORTH